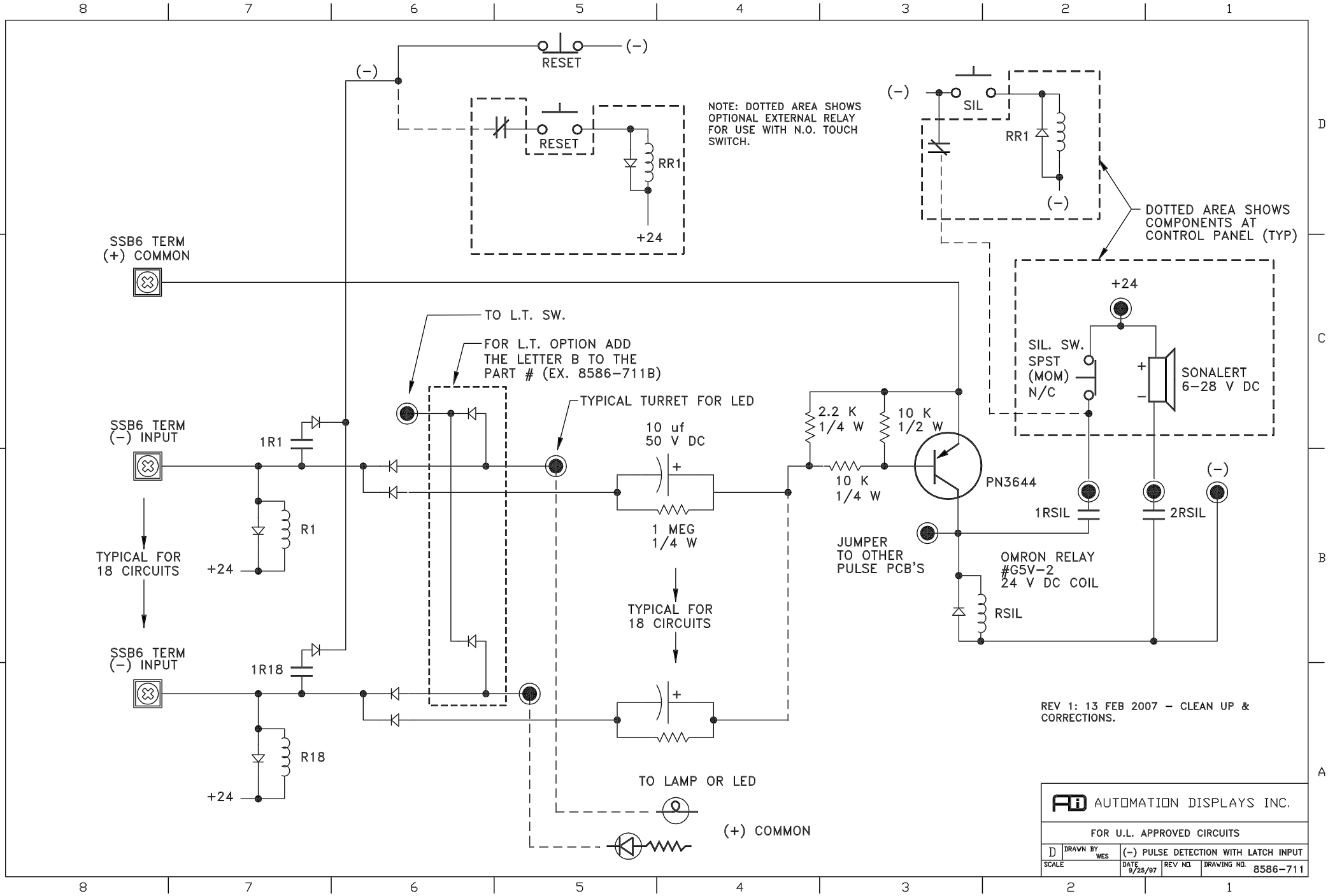
RESET
(−)
(−)
RESET
RR1
+24
NOTE: DOTTED AREA SHOWS OPTIONAL EXTERNAL RELAY FOR USE WITH N.O. TOUCH SWITCH.
(−)
SIL
RR1
(−)
DOTTED AREA SHOWS COMPONENTS AT CONTROL PANEL (TYP)
SSB6 TERM (+) COMMON
+24
SIL. SW. SPST (MOM) N/C
SONALERT 6-28 V DC
TO L.T. SW.
FOR L.T. OPTION ADD THE LETTER B TO THE PART # (EX. 8586-711B)
TYPICAL TURRET FOR LED
SSB6 TERM (−) INPUT
1R1
10 uf 50 V DC
2.2 K 1/4 W
10 K 1/2 W
10 K 1/4 W
PN3644
(−)
1RSIL
2RSIL
R1
1 MEG 1/4 W
JUMPER TO OTHER PULSE PCB'S
OMRON RELAY #G5V-2 24 V DC COIL
TYPICAL FOR 18 CIRCUITS
+24
RSIL
TYPICAL FOR 18 CIRCUITS
SSB6 TERM (−) INPUT
1R18
R18
+24
TO LAMP OR LED
(+) COMMON
REV 1: 13 FEB 2007 – CLEAN UP & CORRECTIONS.
AUTOMATION DISPLAYS INC.
FOR U.L. APPROVED CIRCUITS
D
DRAWN BY WES
(−) PULSE DETECTION WITH LATCH INPUT
SCALE
DATE 9/25/97
REV NO.
DRAWING NO. 8586-711